SMHW48G5

SANY

MATERIAL HANDLER

102,515 LBS OPERATING WEIGHT
338 HP NET HORSEPOWER
65' 6" MAX OPERATING REACH



BUILT TO **FEED THE**
SHREDDER

EASY TO OWN, OPERATE, & SERVICE

INDUSTRY'S STRONGEST STANDARD WARRANTY

3-YEAR* 6,000 HOURS

*Warranty applies to 2026 material handler, forklift truck, reach stacker, and container handler models

MADE FOR AMERICAN OPERATORS

As the next barge ties up alongside the dock at a Gulf Coast port, the operator can raise the cab 8′ 8″, on his SMHW48G5. From this height, he can oversee the barge walls and down into the hold, while featuring a 65′6″ reach and a 64′ of max operating height, allow him to load/ unload with minimal positioning. The Cummins QSL9 engine and high-pressure hydraulics assure the equipment continue moving material load after load. The SANY America team along side the local dealers proudly back it all up with a 3 year/6,000 hour warranty protecting your investment while insuring maximum hours of work with minimal down time. SANY America provides the critical tools our customers depend on to continue producing day in and day out.





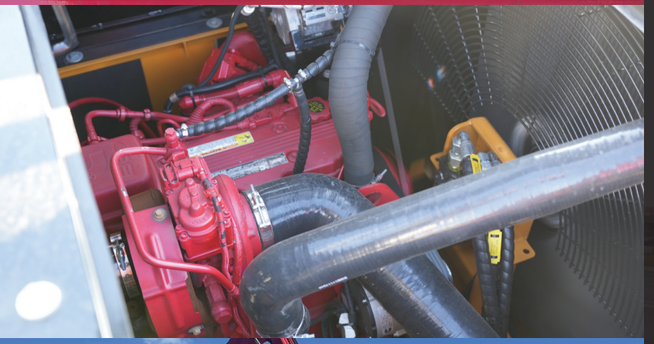





| **OUTRIGGER** STABILITY

The SMHW48G5's four-point outriggers spread to a 15′ 1″ transverse and 17′ 5″ longitudinal operating footprint. That wide, planted stance keeps the machine steady when lifting at full reach, so operators can swing loaded grapples with confidence and keep cycles smooth and predictable.

| **GRAPPLE** READY

The SMHW48G5 comes standard with factory auxiliary hydraulics, including 1-way and 2-way combination piping for high flow and a dedicated 2-way rotation circuit with controls. That means grapple open, close and rotate are plumbed and controlled from the cab, right from the factory.

| **COMPONENTS** YOU TRUST

The SMHW48G5 is built with components by brands you know and trust. From a Cummins QSL9 engine to a Kawasaki combined piston main pump, you're getting a machine made with familiar, proven, reliable systems that offer ample support. It's an ecosystem of dependable components that make ownership easier.

| **EFFICIENT** BY DESIGN

The SMHW48G5 is engineered for efficiency, pairing a 338 hp Cummins engine with a 4,641 psi hydraulic system to deliver fast cycle times from the pile to the shredder. Strong lift capacities, up to 18,960 lbs at 34′ 5″, help move more material per pass, saving fuel and keeping production moving all day.

| **SOLID** TIRES

The SMHW48G5 rides on solid tires built for scrap yards and transfer stations, where sharp metal and debris put pneumatic tires out of service. No flats, no inflation checks, and no downtime waiting on a tire repair. With a 12 mph top travel speed and hydraulic drive, it moves around the yard quickly between piles.

65′ 6″
MAX REACH
maximum operating reach

A MACHINE **THAT'S EASY TO OWN**

This 48-ton class material handler is built for scrap yards, ports and recycling centers, giving you one machine that can feed a shredder, load barges, trucks and railcars, sort material and stack piles. An elevating cab puts the operator right where the work is, and factory auxiliary hydraulics with a dedicated rotation circuit make it grapple ready from day one. Built with components from brands you already trust, familiar, proven, and well-supported, it gives you confidence in long-term reliability. Paired with outriggers and a chassis designed for stability and safety, the SMHW48G5 works hard, adapts easily and makes ownership feel effortless day after day.

RELIABLE FROM THE INSIDE OUT

Working long hours, protecting your crew and keeping material flowing, the SMHW48G5 is built to be truly reliable and engineered to withstand thousands of hours in the toughest conditions. Its structural design handles the stress of constant lifting, swinging and sorting, while the hydraulic system delivers consistent power, force and pressure. The powertrain runs all day long to keep the hydraulic pumps working without a break. Every design choice is made to minimize downtime and maximize productivity. That's why it's backed by a 3-year / 6,000-hour standard warranty—delivering reliability that doesn't compromise your schedule.

338

HORSE POWER

Gross horse power @ 1,800 rpm by Cummins QSL9



STRUCTURAL INTEGRITY

SANY doesn't cut corners on steel. We build each machine with the material it needs to deliver strength, stability and durability. Reinforced booms and sticks with internal ribbing add stiffness and rigidity, while the reinforced chassis undercarriage is built to take a beating on the toughest terrain. In our state-of-the-art factories, robotic welding and CNC cutting ensure every part fits properly and is welded to last. Strict quality control then confirms the structural integrity meets our standards before it ever reaches your jobsite.

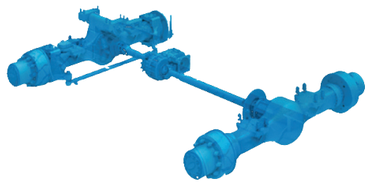

HEAVY-DUTY AXLES

The SMHW48G5 rides on heavy-duty axles, a 19MREZH-X148AG front and 19MREHH-X148AGB rear, built to carry its 102,515 lb operating weight shift after shift. Hydraulic drive, a 10′ 6″ wheelbase and a 10′ 3″ wheel width keep the machine stable and maneuverable in the yard, with a 28′ 11″ minimum turning radius. A top travel speed of 12 mph moves it quickly between piles, trucks and the shredder, so less time is spent traveling and more time is spent moving material.

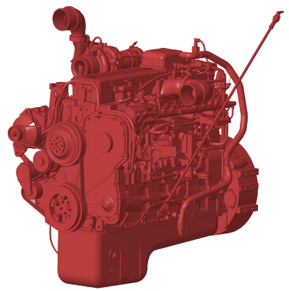

POWERTRAIN BY CUMMINS

Powered by a Cummins QSL9 diesel engine that meets or exceeds EPA emissions regulations, the SMHW48G5 provides the efficiency and compliance your business needs. With 338 hp at 1,800 rpm and 1,126 lb-ft of torque at 1,400 rpm, it delivers the power to run day and night in the most demanding yards. It's a powertrain you already know and trust—backed by a major support network—where parts, service and expertise are always within reach. That means more uptime, less worry and a machine that works as hard as you do.

18+ FEATURES

specifically designed for operator and jobsite safety.



SAFETY PRIORITIZED

We design for safety first. Operators get secure handrails, steps, and anti-slip on top, OEM FOPS cab guarding, and a ROPS-verified cab with multiple exit points. A three-inch seatbelt, emergency shut-off and fire extinguisher add protection inside, while cameras, alarms, and 360° lighting enhance awareness for a safer jobsite.

SMHW48G5

SANY

MATERIAL HANDLER

102,515 LBS OPERATING WEIGHT
338 HP NET HORSEPOWER
65' 6" MAX OPERATING REACH

TECHNICAL SPECIFICATIONS

MACHINE DATA	
Engine	Cummins QSL9 252kW
Engine Emission	Stage V
Engine Rated Power	338 hp / 1,800 rpm
Engine Rated Torque	1,126 lb-ft / 1,400 rpm
Operating Weight (Excluding Grip)	102,515 lbs
Max. Operating Radius (Without Gripper)	65' 6"
Max. Operating Depth (Without Gripper)	17' 7"
Max. Operating Height (Excluding Gripper)	64' 0"
Max. Rotating Speed	8 rpm
Max. Gradeability	35%
Max. Traveling Speed	12 mph
Min. Turning Radius	28' 11"
Hydraulic System Relief Pressure	4,641 psi
Hydraulic System Total Displacement	0.056 gal + 0.056 gal
System Voltage	24 v
Load Capacity (Maximum Range)	9,480 lbs @ 65' 6"
Load Capacity (Usual Range)	18,960 lbs @ 34' 5"
Drive Mode	Hydraulic Drive

COMPONENTS	
Radiator	Radiator ZH1117x626x1357-S110Y120Z48Q/L03084
Slewing Reducer	Gearbox Assembly GS20D25J.0
Slewing Bearing	Slewing Bearing SSF1405.50CWHII
Central Rotary Joint	Central Rotating Connector Assembly SMHW40.8.2.1
Main Pump	KAWASAKI Combined Pump Assembly K5V212DPH1N6R-0E81-V
Transmission	Transmission 360GB25627
Axle	Front Axle 19MREZH-X148AG
Axle	Rear Axle 19MREHH-X148AGB

*Operating weight is for the SMHW48G5 with no attachments, and standard stick.

SANY America Inc. reserves the right to change these specifications at any time without prior notification. ©2026 SANY America Inc. HEXPS26SMHW48G5001

MATERIAL HANDLER SMHW48G5

STANDARD FEATURES

ENGINE
- Cummins Engine QSL9 Stage 5
- Auto-idle & Auto-idle-shutdown
- Dual-element dry air filter
- Batteries 24V (2 – 12V)
- Coolant Expansion tank
- Electronic engine control
- Enclosed fan guard
- Engine coolant to –34 deg. F
- Fuel filter with water separator
- Full-flow oil filter
- Turbocharger with charge air cooler
- High flow hydraulically powered cooling fan
- 500-hour engine-oil-change interval
- 70% (35 deg.) off-level capability
- Engine air precleaner
- Severe-duty fuel filter

HYDRAULIC SYSTEM
- Spring-applied, hydraulically released automatic swing brake
- Auxiliary hydraulic-flow adjustments through monitor
- Control pattern change valve
- Auxiliary hydraulics with 1 and 2-way combination piping for high flow
- Auxiliary hydraulics with 2- way rotation piping and controls
- Auxiliary pilot and electric controls
- Quick coupler plumbing and control
- Boom Cylinder
- Motion Arm Explosion-proof Valve
- Hydraulic Control Valve / Multi-way Valve
- Arm Cylinder
- Blast-proof Gate Valves

UNDERCARRIAGE
- Front axle 19MREZH-X148AG
- Rear axle 19MREHH-X148AGB
- Planetary drive with axial piston motors
- Transmission 360GB25627
- Reducer GS20D25C-G1H1N
- Slewing bearing SSF1405.50CWHII
- Center rotation connector assembly SMHW40.8.2.1
- Propel motor shields
- 2-speed travel selection
- Undercarriage frame opening guard

BOOM & STICK
- Boom (Standard) 34' 5"
- Stick (Option 1) 24' 7"
- Stick (Option 2) 31' 2"

UPPERSTRUCTURE
- Right-hand, left-hand, and counterweight mirrors
- Vandal lock: Cab door /Service door/ Toolbox/Cab Filter
- Debris screen in side panel
- Remote-mounted engine oil and fuel filters
- Heavy duty triangle channel frame guard

ATTACHMENTS
- Convenient grease points
- Centralized lubrication system
- Oil-impregnated bushings
- Reinforced resin thrust plates

OPERATOR'S STATION
- Adjustable independent-control positions
- AM/FM radio with USB charging and Bluetooth® connectivity
- Auto climate control/air conditioner/heater/pressurizer
- Built-in Operator's Manual storage compartment and manual
- 12 and 24V outlets 60 watt 5 amp
- Deluxe heated air suspension cloth seat with adjustable armrests
- Heavy duty rubber floor mat
- Front windshield wiper with intermittent speeds
- Illuminated gauge: diesel exhaust fluid, engine coolant, and fuel levels
- Horn, electric
- Hour meter, electric
- Hydraulic shutoff lever, all controls
- Interior light
- Large cup holder
- Digital Power mode selection: 3 power modes
- Digital tool selection: bucket, shear, hammer, etc.
- 10" Touch screen LCD monitor
- Motion alarm with cancel switch (conforms to SAE J994)
- Auxiliary hydraulic control switches in right console lever
- 3" Orange retractable seat belt
- Transparent overhead hatch
- Heated or cooled food/beverage storage
- Hydraulic oil filter restriction indicator light
- Protection screens for cab front, rear, and side (optional)

ELECTRICAL
- 60-amp alternator
- Ground level electrical disconnect (lockout tag out)
- Blade-type multi-fused circuits
- Positive-terminal battery covers
- Rearview and blind-side camera

LIGHTS
- Bright LED worklight package

In the interest of continual equipment development, SANY America Inc. reserves the right to change these specifications at any time without prior notification.
©2026 SANY America Inc. HEXPS26SMHW48G5001

LIFTING PERFORMANCE

Standard 34' 5" Boom
Standard 24' 7" Stick
Standard 10' 3" Wheel Width
Bucket Options Available

Ratings are based on ISO 10567:2007. Lift capacity does not exceed 75% of tipping load with the machine on firm, level ground or 87% of hydraulic lifting capacity.

LIFT CAPACITIES OF MATERIAL HANDLER

(Boom 34' 5", Stick 24' 7", Unit: Ton)

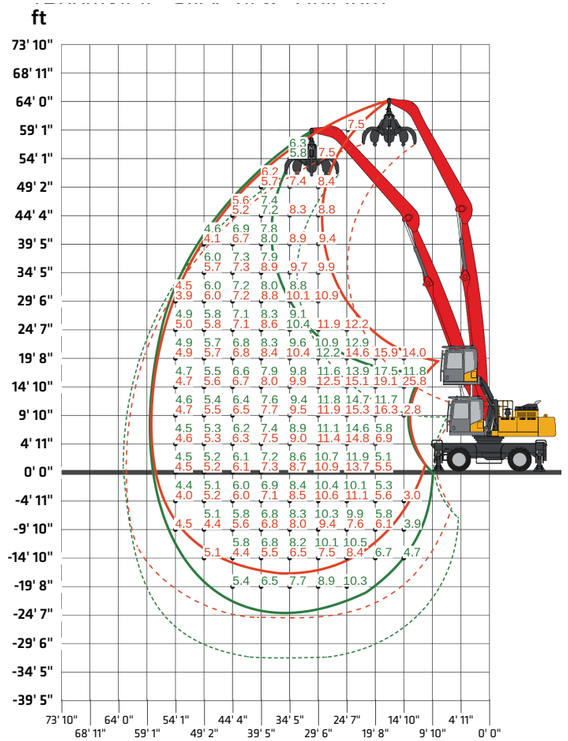

(Tip of Boom Path w/ Lower Full - Floating Axle Position)

(Grapple Path w/ Lower Full - Floating Axle Position)

(Tip of Boom Path w/ Upper Full - Floating Axle Position)

(Grapple Path w/ Upper Full - Floating Axle Position)

LIFT CAPACITIES OF MATERIAL HANDLER

(Boom 34' 5", Stick 31' 2", Unit: Ton)

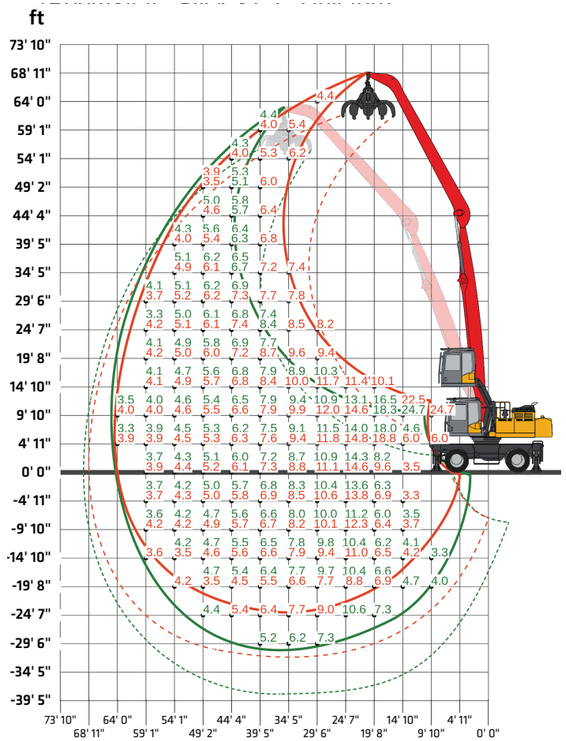

In the interest of continual equipment development, SANY America Inc. reserves the right to change these specifications at any time without prior notification.
©2026 SANY America Inc. HEXPS26SMHW48G5001

sanyamerica.com ||| SMHW48G5

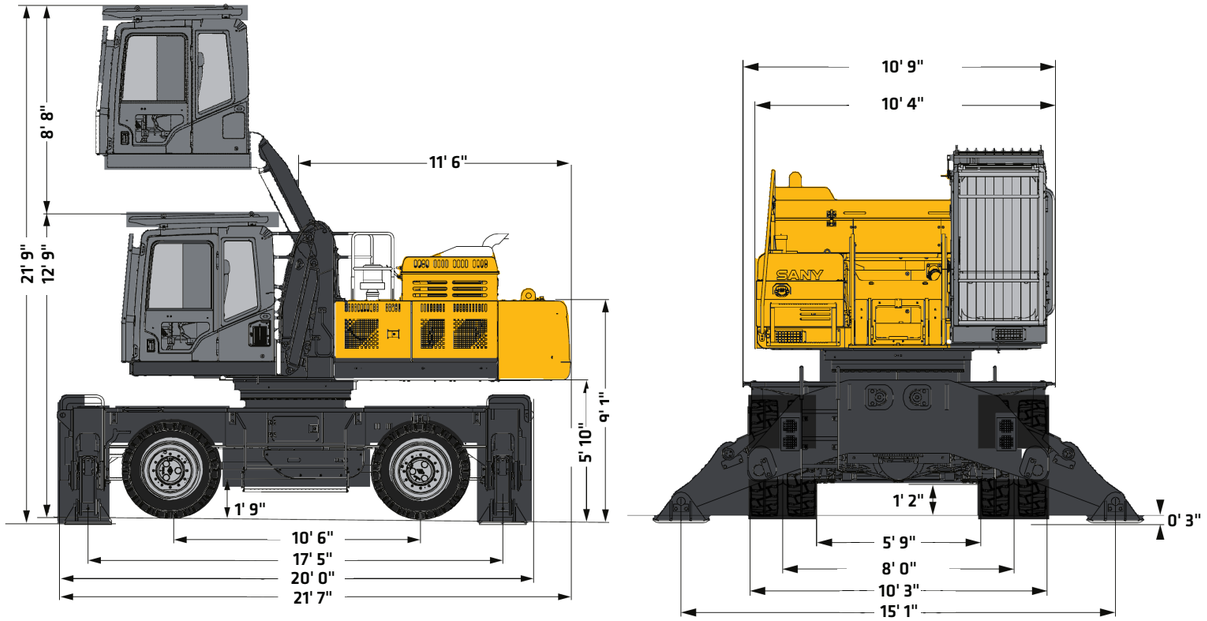

DIMENSIONS	
Overall Length (Excluding Boom and Gripper)	21' 7"
Overall Width (Excluding Boom and Gripper)	10' 9"
Overall Height (Excluding Boom and Gripper) (Cab Lowered)	12' 9"
Cabin Elevation Height	8' 8"
Outrigger Transverse Span (Operating)	15' 1"
Outrigger longitudinal span (Operating)	17' 5"
Tail Swing Radius	11' 6"
Wheel Width	10' 3"
Wheelbase	10' 6"
Boom Length (Standard)	34' 5"
Stick Length-Option 1	24' 7"
Stick Length-Option 2	31' 2"

In the interest of continual equipment development, SANY America Inc. reserves the right to change these specifications at any time without prior notification.
©2026 SANY America Inc. HEXPS26SMHW48G5001

INDUSTRY'S STRONGEST STANDARD WARRANTY | 3-YEAR* 6,000 HOURS

*Warranty applies to 2026 Material Handler Models

SANY America Inc. 318 SANY Way
Peachtree City, Georgia 30269
470.552.SANY sanyamerica.com

CONNECTED, **INFORMED**, IN CONTROL
TECHNOLOGY

CONNECTED EVI TELEMATICS

EVI is SANY's proprietary telematics platform and is available through your local dealer on material handlers. This dashboard lets you track and geofence the machine, view reports on consumption and run time, monitor error codes and manage your SANY fleet—all with more features continually being launched to keep you connected and in control.

SMART REACH LIMITERS

Adjustable height and reach limiters let operators set working boundaries from the cab, keeping the attachment clear of the cab, overhead lines and nearby structures. A limit switch helps prevent the grapple from contacting the cab, protecting both operator and machine. These controls help reduce damage, improve safety and keep production moving.

INFORMATION AT YOUR FINGERTIPS

The 10-inch touchscreen display is the operator's hub, showing key machine metrics like fuel and DEF levels, engine coolant temperature, service codes and more. It also displays rearview and blind-side camera views, allows quick adjustment of HVAC and radio, while also supporting Bluetooth connectivity, three power modes, auxiliary flow settings and attachment selection, all in one easy-to-use central command center.



DO EVERYTHING

Perform tasks and view important data all through one display.



16 POINTS

of seat adjustablity plus heated and cooled functions.

DESIGNED FOR **COMFORT** ALL SHIFT LONG

This spacious cab is built for comfort and intuitiveness with safety and ergonomics at the core. The heated air suspension seat with adjustable armrests is built for all-day comfort. Common functions sit within easy reach and the 10" touchscreen display serves as the control hub. Automatic climate control keeps the cab comfortable in any weather, while Bluetooth connectivity allows hands-free use of your phone. The elevated cab and large glass panels maximize visibility of the pile, the truck and the shredder, helping operators stay confident and productive throughout the shift.

BUILT **AROUND THE** OPERATOR



CUSTOM OPERATOR ERGONOMICS

The 16-way adjustable air-ride seat gives operators complete control over their seating position—height, distance, and angle—so they can align perfectly with the joysticks and foot pedals. This precise adjustability supports better control and a more comfortable working posture all day long.

OPTIMAL JOBSITE AWARENESS

With an 8' 8" cab elevation height, operators look down into the pile, the truck bed and the shredder infeed. Large glass panels, a transparent overhead hatch and integrated rearview and blind-side cameras give a clear view of the surroundings, and right-hand, left-hand and counterweight mirrors help them safely control the machine across the yard.

INTENTIONALY **ENGINEERED**
FOR SERVICE

UPTIME IS OUR PRIORITY

With fast diagnostics, streamlined repairs and software tools for remote support it's easy to keep your SANY excavator running strong. Our local dealer network, stretching across North America, provides quick response and maximizes your productivity.

DEDICATED TO SUPPORT

We're expanding our U.S. footprint with local engineering, quality assurance and service teams—backed by a multi-year investment in support, training, and parts.

EASE OF ACCESS

Its spacious compartments offer ample room for tools, filters, and components, ensuring efficient inspections and replacements that minimize downtime on the job site.

FAST DAILY PRE-CHECKS

Machines are designed so operators can safely and easily inspect critical systems—mostly from the ground—for quick visual and manual checks.

PARTS ON THE SHELF READY TO SHIP

We continually expand parts inventory across our major North American distribution centers and improve forecasting to keep high-demand components in stock. This longterm strategy ensures critical parts are ready to ship when they're needed most.







WE'VE GOT
YOUR BACK

At SANY, we see every customer as a relationship whose success is directly tied to ours. We focus on keeping you productive, because when your machines are running, your business is winning. Our warranty support, faster claim approvals are built to protect your operations not just your equipment. Your feedback fuels continuous improvement—real updates to software, hydraulics, and performance through close collaboration with key suppliers. With expanding U.S. support, trained technicians, ongoing investments, and stronger parts availability, we stay by your side so your business can keep moving forward.



CUSTOMERS FIRST ALWAYS

At SANY America, everything begins with you. We design machines that make your work safer, more efficient, and more profitable—and we stand behind them with U.S.-based support you can count on. From ergonomic cabs and superior visibility to quick daily checks and dependable uptime, every feature is engineered around real operator needs and real jobsite demands. Your feedback directly drives our product improvements, accelerating software updates, hydraulic refinements, and long-term durability enhancements. With expanding American facilities, local engineering and service teams, certified technicians, and three parts distribution centers nationwide, we operate as your committed business partner—focused on your success today and every day ahead.

INDUSTRY'S **STRONGEST** STANDARD WARRANTY

SANY America delivers the most comprehensive standard warranty in the industry—protecting your investment from day one.

- **3 years / 6,000 hours of full machine coverage included with every material handler**
- **Lower total operating risk and fewer unexpected costs over machine life**
- **Confidence in long-term durability backed by factory engineering and testing**
- **Stronger coverage than leading OEM competitors – standard, not add-on**

Choosing SANY means choosing equipment built to work—and a partner committed to standing behind your success.

FINANCING THAT WORKS AS HARD AS YOU DO

Smart financing that makes owning SANY equipment faster, easier, and affordable.

- **Quick approvals – many customers approved in under 5 minutes**
- **Simple mobile app for secure document signing and easy payment management**
- **Flexible terms and competitive promotions**
- **Faster approvals for repeat customers to keep your fleet growing**
- **Top-rated experience with a 4.9 out of 5 Trustpilot score**

Financing with SANY is built to support your business growth every step of the way.

TOTAL COST OF OWNERSHIP

SANY machines are engineered to deliver a stronger return on investment by lowering the true cost of ownership over the life of your equipment.

- **Fuel-efficient performance reduces operating costs every hour the machine runs**
- **Extended service intervals minimize downtime and maintenance expense**
- **Parts cost management keeps replacement and wear items affordable**
- **High resale value helps protect your investment over time**
- **More standard features from the factory reduce the need for costly add-ons**

Every detail is designed to help you earn more, spend less, and get maximum value from every machine you own.



SANY America Inc.
318 SANY Way
Peachtree City | GA 30269
T | 470-552-SANY

BRCE26SMHW48G5001

sanyamerica.com

In the interest of continual equipment development, SANY America Inc. reserves the right to change these specifications at any time without prior notification.

© 2026 SANY America Inc.